© Seiko Instruments Inc., 2006-2010 Rev.3.0_00

The S-1133 Series is a positive voltage regulator with a low dropout voltage, high output voltage accuracy, and low current consumption (300 mA output current) developed based on CMOS technology.
A 1 μF small ceramic capacitor can be used[*1]. It operates with low current consumption of 60 μA typ. The S-1133 Series includes an overcurrent protection circuit that prevents the output current from exceeding the current capacitance of the output transistor and a thermal shutdown circuit that prevents damage due to overheating.
In addition to the types in which output voltage is set inside the IC, a type for which output voltage can be set via an external resistor is added to a lineup (S-1133x00 Series). SOT-89-5 and super-small SNT-8A packages realize high-density mounting. This, in addition to low current consumption, makes the S-1133 Series ideal for mobile devices.

***1.** A ceramic capacitor of 2.2 μF or more can be used for products whose output voltage is 1.7 V or less.

■ Features

- Output voltage : 1.2 to 6.0 V, selectable in 0.1 V steps.
- Voltage setting via external resistor : Selectable from 1.8 to 8.2 V (S-1133B00/S-1133A00)
- Input voltage range : 2.0 to 10 V
- High-accuracy output voltage : ±1.0% accuracy (1.2 to 1.4 V output product : ±15 mV accuracy)
- Low dropout voltage : 130 mV typ. (3.0 V output product, I_{OUT} = 100 mA)
- Low current consumption : During operation : 60 μA typ., 90 μA max.
  During shutdown : 0.1 μA typ., 1.0 μA max.
- Output current : 300 mA output is possible (at $V_{IN} \geq V_{OUT(S)} + 1.0$ V)[*1]
- Low ESR capacitor can be used : A ceramic capacitor of 1.0 μF or more can be used for the input and output capacitors.
  (A ceramic capacitor of 2.2 μF or more can be used for products whose output voltage is 1.7 V or less.)
- High ripple rejection : 70 dB typ. (at 1.0 kHz, V_{OUT} = 1.2 V)
- Built-in overcurrent protection circuit : Overcurrent of output transistor can be restricted.
- Built-in thermal shutdown circuit : Prevents damage due to overheating.
- Built-in ON/OFF circuit : Ensures long battery life.
- Lead-free, Sn 100%, halogen-free[*2]

***1.** Attention should be paid to the power dissipation of the package when the output current is large.
***2.** Refer to "■ **Product Name Structure**" for details.

■ Applications

- Power supply for battery-powered devices
- Power supply for communication devices
- Power supply for home electric appliances

■ Packages

- SOT-89-5
- SNT-8A

■ Block Diagrams

1. Types in which output voltage is internally set (S-1133x12 to S-1133x60)

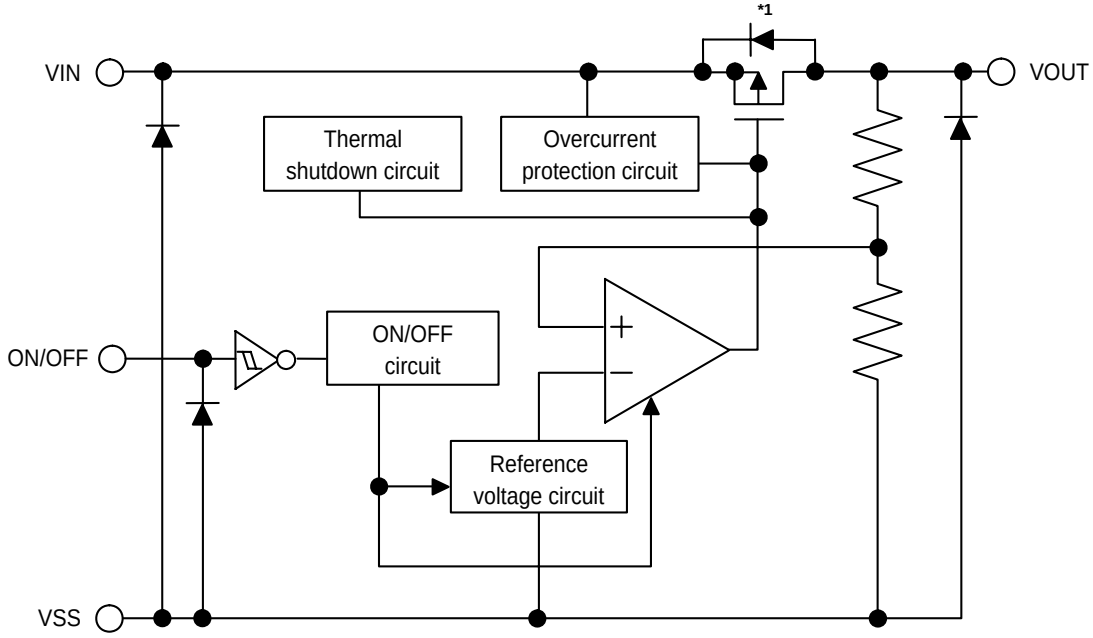

***1.** Parasitic diode

Figure 1

2. Types in which output voltage is externally set (S-1133B00 and S-1133A00 only)

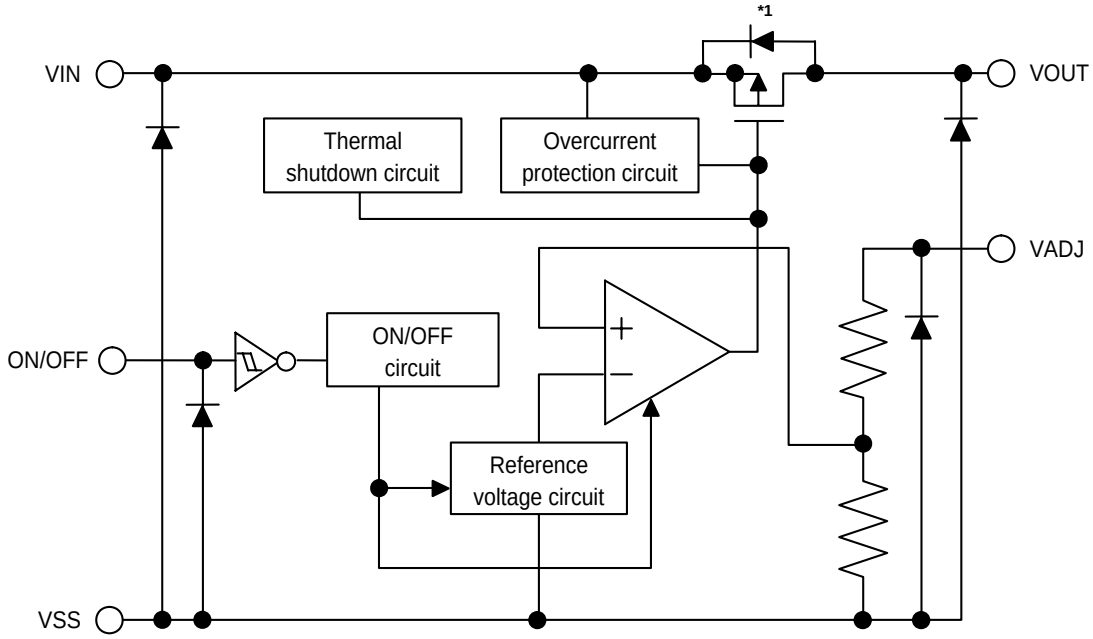

***1.** Parasitic diode

Figure 2

■ Product Name Structure

- The product types, output voltage, and package types for the S-1133 Series can be selected at the user's request. Refer to the "**1. Product name**" for the meanings of the characters in the product name, "**2. Package**" regarding the package drawings and "**3. Product name list**" for the full product names.

1. Product name

S-1133 x xx – xxxx x

Environmental code
- U : Lead-free (Sn 100%), halogen-free
- G : Lead-free (for details, please contact our sales office)

Package abbreviation and packing specifications*1
- U5T1: SOT-89-5, Tape
- I8T1 : SNT-8A, Tape

Output voltage
- 00 : Externally set
- 12 to 60 : Internally set
- (e.g., when the output voltage is 1.2 V, it is expressed as 12.)

Product type*2
- A : ON/OFF pin negative logic
- B : ON/OFF pin positive logic

***1.** Refer to the tape specifications at the end of this book.
***2.** Refer to "**3. Shutdown pin (ON/OFF pin)**" in "**Operation**".

2. Package

Package Name	Drawing Code			
	Package	Tape	Reel	Land
SOT-89-5	UP005-A-P-SD	UP005-A-C-SD	UP005-A-R-SD	UP005-A-L-S1
SNT-8A	PH008-A-P-SD	PH008-A-C-SD	PH008-A-R-SD	PH008-A-L-SD

3. Product name list

Table 1 (1/2)

Output Voltage	SOT-89-5	SNT-8A
Externally set	S-1133B00-U5T1x	S-1133B00-I8T1x
1.2 V ±15 mV	S-1133B12-U5T1x	S-1133B12-I8T1x
1.3 V ±15 mV	S-1133B13-U5T1x	S-1133B13-I8T1x
1.4 V ±15 mV	S-1133B14-U5T1x	S-1133B14-I8T1x
1.5 V ±1.0%	S-1133B15-U5T1x	S-1133B15-I8T1x
1.6 V ±1.0%	S-1133B16-U5T1x	S-1133B16-I8T1x
1.7 V ±1.0%	S-1133B17-U5T1x	S-1133B17-I8T1x
1.8 V ±1.0%	S-1133B18-U5T1x	S-1133B18-I8T1x
1.9 V ±1.0%	S-1133B19-U5T1x	S-1133B19-I8T1x
2.0 V ±1.0%	S-1133B20-U5T1x	S-1133B20-I8T1x
2.1 V ±1.0%	S-1133B21-U5T1x	S-1133B21-I8T1x
2.2 V ±1.0%	S-1133B22-U5T1x	S-1133B22-I8T1x
2.3 V ±1.0%	S-1133B23-U5T1x	S-1133B23-I8T1x
2.4 V ±1.0%	S-1133B24-U5T1x	S-1133B24-I8T1x
2.5 V ±1.0%	S-1133B25-U5T1x	S-1133B25-I8T1x
2.6 V ±1.0%	S-1133B26-U5T1x	S-1133B26-I8T1x
2.7 V ±1.0%	S-1133B27-U5T1x	S-1133B27-I8T1x
2.8 V ±1.0%	S-1133B28-U5T1x	S-1133B28-I8T1x
2.9 V ±1.0%	S-1133B29-U5T1x	S-1133B29-I8T1x
3.0 V ±1.0%	S-1133B30-U5T1x	S-1133B30-I8T1x
3.1 V ±1.0%	S-1133B31-U5T1x	S-1133B31-I8T1x
3.2 V ±1.0%	S-1133B32-U5T1x	S-1133B32-I8T1x
3.3 V ±1.0%	S-1133B33-U5T1x	S-1133B33-I8T1x
3.4 V ±1.0%	S-1133B34-U5T1x	S-1133B34-I8T1x
3.5 V ±1.0%	S-1133B35-U5T1x	S-1133B35-I8T1x
3.6 V ±1.0%	S-1133B36-U5T1x	S-1133B36-I8T1x
3.7 V ±1.0%	S-1133B37-U5T1x	S-1133B37-I8T1x
3.8 V ±1.0%	S-1133B38-U5T1x	S-1133B38-I8T1x
3.9 V ±1.0%	S-1133B39-U5T1x	S-1133B39-I8T1x
4.0 V ±1.0%	S-1133B40-U5T1x	S-1133B40-I8T1x
4.1 V ±1.0%	S-1133B41-U5T1x	S-1133B41-I8T1x
4.2 V ±1.0%	S-1133B42-U5T1x	S-1133B42-I8T1x
4.3 V ±1.0%	S-1133B43-U5T1x	S-1133B43-I8T1x
4.4 V ±1.0%	S-1133B44-U5T1x	S-1133B44-I8T1x
4.5 V ±1.0%	S-1133B45-U5T1x	S-1133B45-I8T1x
4.6 V ±1.0%	S-1133B46-U5T1x	S-1133B46-I8T1x
4.7 V ±1.0%	S-1133B47-U5T1x	S-1133B47-I8T1x
4.8 V ±1.0%	S-1133B48-U5T1x	S-1133B48-I8T1x
4.9 V ±1.0%	S-1133B49-U5T1x	S-1133B49-I8T1x
5.0 V ±1.0%	S-1133B50-U5T1x	S-1133B50-I8T1x
5.1 V ±1.0%	S-1133B51-U5T1x	S-1133B51-I8T1x
5.2 V ±1.0%	S-1133B52-U5T1x	S-1133B52-I8T1x
5.3 V ±1.0%	S-1133B53-U5T1x	S-1133B53-I8T1x
5.4 V ±1.0%	S-1133B54-U5T1x	S-1133B54-I8T1x
5.5 V ±1.0%	S-1133B55-U5T1x	S-1133B55-I8T1x
5.6 V ±1.0%	S-1133B56-U5T1x	S-1133B56-I8T1x

Table 1 (2/2)

Output Voltage	SOT-89-5	SNT-8A
5.7 V ±1.0%	S-1133B57-U5T1x	S-1133B57 I8T1x
5.8 V ±1.0%	S-1133B58-U5T1x	S-1133B58-I8T1x
5.9 V ±1.0%	S-1133B59-U5T1x	S-1133B59-I8T1x
6.0 V ±1.0%	S-1133B60-U5T1x	S-1133B60-I8T1x

Remark 1. Please contact our sales office for type A products.
2. x: G or U
3. Please select products of environmental code = U for Sn 100%, halogen-free products.

■ Pin Configurations

SOT-89-5
Top view

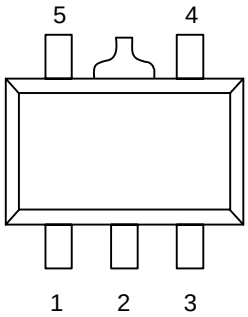

Figure 3

Table 2

Pin No.	Symbol	Description
1	VADJ	Output voltage adjustment pin (S-1133B00/S-1133A00 only)
	NC*1	No connection (S-1133x12 to S-1133x60)
2	VSS	GND pin
3	ON/OFF	Shutdown pin
4	VIN	Voltage input pin
5	VOUT	Voltage output pin

***1.** The NC pin is electrically open.
The NC pin can be connected to VIN or VSS.

SNT-8A
Top view

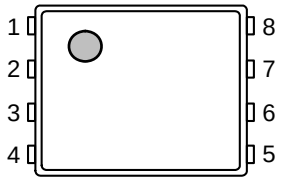

Figure 4

Table 3

Pin No.	Pin Name	Functions
1	VOUT*1	Voltage output pin
2	VOUT*1	Voltage output pin
3	NC*2	No connection (S-1133x12 to S-1133x60)
	VADJ	Output voltage adjustment pin (S-1133B00/S-1133A00 only)
4	NC*2	No connection
5	VSS	GND pin
6	ON/OFF	Shutdown pin
7	VIN*3	Voltage input pin
8	VIN*3	Voltage input pin

***1.** Although pins of number 1 and 2 are connected internally, be sure to short-circuit them nearest in use.

***2.** The NC pin is electrically open.
The NC pin can be connected to VIN or VSS.

***3.** Although pins of number 7 and 8 are connected internally, be sure to short-circuit them nearest in use.

■ Absolute Maximum Ratings

Table 4

(Ta = 25 °C unless otherwise specified)

Item		Symbol	Absolute Maximum Rating	Unit
Input voltage		V_{IN}	V_{SS} − 0.3 to V_{SS} + 12	V
		$V_{ON/OFF}$	V_{SS} − 0.3 to V_{SS} + 12	V
		V_{ADJ}	V_{SS} − 0.3 to V_{SS} + 12	V
Output voltage		V_{OUT}	V_{SS} − 0.3 to V_{IN} + 0.3	V
Power dissipation	SOT-89-5	P_D	1000*1	mW
	SNT-8A		450*1	mW
Operating ambient temperature		T_{opr}	−40 to +85	°C
Storage temperature		T_{stg}	−40 to +125	°C

***1.** When mounted on printed circuit board
[Mounted Board]
(1) Board size : 114.3 mm × 76.2 mm × t1.6 mm
(2) Board name : JEDEC STANDARD51-7

Caution The absolute maximum ratings are rated values exceeding which the product could suffer physical damage. These values must therefore not be exceeded under any conditions.

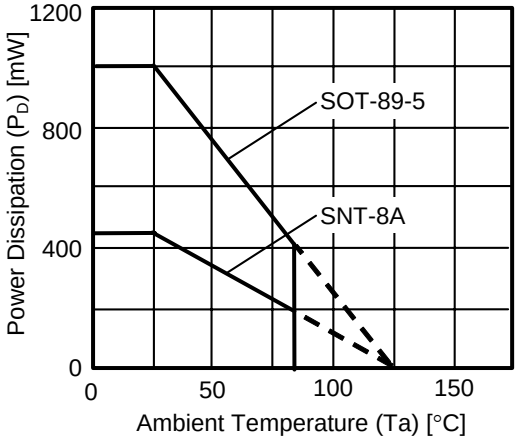

Figure 5 Power Dissipation of Packages (Mounted on Printed Circuit Board)

Caution The thermal shutdown circuit may operate when the junction temperature is around 150 °C.

■ Electrical Characteristics

1. Types in which output voltage is internally set (S-1133x12 to S-1133x60)

Table 5

(Ta = 25 °C unless otherwise specified)

Item	Symbol	Conditions		Min.	Typ.	Max.	Unit	Test Circuit
Output voltage*1	$V_{OUT(E)}$	$V_{IN} = V_{OUT(S)} + 1.0$ V, $I_{OUT} = 100$ mA	$1.2 \text{ V} \le V_{OUT(S)} \le 1.4$ V	$V_{OUT(S)} - 0.015$	$V_{OUT(S)}$	$V_{OUT(S)} + 0.015$	V	1
			$1.5 \text{ V} \le V_{OUT(S)} \le 6.0$ V	$V_{OUT(S)} \times 0.99$	$V_{OUT(S)}$	$V_{OUT(S)} \times 1.01$	V	1
Output current*2	I_{OUT}	$V_{IN} \ge V_{OUT(S)} + 1.0$ V		300*5	—	—	mA	3
Dropout voltage*3	V_{drop}	$I_{OUT} = 100$ mA	$V_{OUT(S)} = 1.2$ V	0.8	0.84	0.88	V	1
			$V_{OUT(S)} = 1.3$ V	—	0.74	0.78	V	1
			$V_{OUT(S)} = 1.4$ V	—	0.64	0.68	V	1
			$1.5 \text{ V} \le V_{OUT(S)} \le 1.9$ V	—	0.54	0.58	V	1
			$2.0 \text{ V} \le V_{OUT(S)} \le 2.4$ V	—	0.15	0.23	V	1
			$2.5 \text{ V} \le V_{OUT(S)} \le 2.9$ V	—	0.14	0.21	V	1
			$3.0 \text{ V} \le V_{OUT(S)} \le 3.2$ V	—	0.13	0.19	V	1
			$3.3 \text{ V} \le V_{OUT(S)} \le 6.0$ V	—	0.10	0.15	V	1
Line regulation	$\frac{\Delta V_{OUT1}}{\Delta V_{IN} \cdot V_{OUT}}$	$V_{OUT(S)} + 0.5 \text{ V} \le V_{IN} \le 10$ V, $I_{OUT} = 100$ mA		—	0.02	0.2	%/V	1
Load regulation	ΔV_{OUT2}	$V_{IN} = V_{OUT(S)} + 1.0$ V, $1.0 \text{ mA} \le I_{OUT} \le 100$ mA		—	15	40	mV	1
Output voltage temperature coefficient*4	$\frac{\Delta V_{OUT}}{\Delta Ta \cdot V_{OUT}}$	$V_{IN} = V_{OUT(S)} + 1.0$ V, $I_{OUT} = 30$ mA, $-40 \text{ °C} \le Ta \le 85$ °C		—	±130	—	ppm/°C	1
Current consumption during operation	I_{SS1}	$V_{IN} = V_{OUT(S)} + 1.0$ V, ON/OFF pin = ON, no load		—	60	90	μA	2
Current consumption during shutdown	I_{SS2}	$V_{IN} = V_{OUT(S)} + 1.0$ V, ON/OFF pin = OFF, no load		—	0.1	1.0	μA	2
Input voltage	V_{IN}	—		2.0	—	10	V	—
Shutdown pin input voltage "H"	V_{SH}	$V_{IN} = V_{OUT(S)} + 1.0$ V, $R_L = 1.0$ kΩ		1.5	—	—	V	4
Shutdown pin input voltage "L"	V_{SL}	$V_{IN} = V_{OUT(S)} + 1.0$ V, $R_L = 1.0$ kΩ		—	—	0.25	V	4
Shutdown pin input current "H"	I_{SH}	$V_{IN} = V_{OUT(S)} + 1.0$ V, $V_{ON/OFF} = 7$ V		−0.1	—	0.1	μA	4
Shutdown pin input current "L"	I_{SL}	$V_{IN} = V_{OUT(S)} + 1.0$ V, $V_{ON/OFF} = 0$ V		−0.1	—	0.1	μA	4
Ripple rejection	$\lvert RR \rvert$	$V_{IN} = V_{OUT(S)} + 1.0$ V, f = 1.0 kHz, $\Delta V_{rip} = 0.5$ Vrms, $I_{OUT} = 50$ mA	$1.2 \text{ V} \le V_{OUT(S)} \le 1.5$ V	—	70	—	dB	5
			$1.6 \text{ V} \le V_{OUT(S)} \le 3.0$ V	—	65	—	dB	5
			$3.1 \text{ V} \le V_{OUT(S)} \le 6.0$ V	—	60	—	dB	5
Short-circuit current	I_{short}	$V_{IN} = V_{OUT(S)} + 1.0$ V, ON/OFF pin = ON, $V_{OUT} = 0$ V		—	200	—	mA	3
Thermal shutdown detection temperature	T_{SD}	Junction temperature		—	150	—	°C	—
Thermal shutdown release temperature	T_{SR}	Junction temperature		—	120	—	°C	—

***1.** $V_{OUT(S)}$: Specified output voltage
$V_{OUT(E)}$: Actual output voltage at the fixed load
The output voltage when fixing I_{OUT} (= 100 mA) and inputting $V_{OUT(S)}$ + 1.0 V

***2.** The output current at which the output voltage becomes 95% of $V_{OUT(E)}$ after gradually increasing the output current.

***3.** $V_{drop} = V_{IN1} - (V_{OUT3} \times 0.98)$
V_{OUT3} is the output voltage when $V_{IN} = V_{OUT(S)} + 1.0$ V and $I_{OUT} = 100$ mA.
V_{IN1} is the input voltage at which the output voltage becomes 98% of V_{OUT3} after gradually decreasing the input voltage.

***4.** The change in temperature [mV/°C] is calculated using the following equation.

$$\frac{\Delta V_{OUT}}{\Delta Ta}[\text{mV/°C}]^{*1} = V_{OUT(S)}[\text{V}]^{*2} \times \frac{\Delta V_{OUT}}{\Delta Ta \ \ V_{OUT}}[\text{ppm/°C}]^{*3} \div 1000$$

***1.** The change in temperature of the output voltage
***2.** Specified output voltage
***3.** Output voltage temperature coefficient

***5.** The output current can be at least this value. Due to restrictions on the package power dissipation, this value may not be satisfied. Attention should be paid to the power dissipation of the package when the output current is large. This specification is guaranteed by design.

2. Types in which output voltage is externally set (S-1133B00 and S-1133A00 only)

Table 6

(Ta = 25 °C unless otherwise specified)

Item	Symbol	Conditions	Min.	Typ.	Max.	Unit	Test Circuit
Output voltage of adjust pin*1	V_{VADJ}	$V_{VADJ} = V_{OUT}$, $V_{IN} = V_{OUT(S)} + 1.0$ V, $I_{OUT} = 100$ mA	1.782	1.800	1.818	V	6
Output voltage range	V_{ROUT}	—	1.8	—	8.2	V	11
Internal resistance value of adjust pin	R_{VADJ}	—	—	200	—	kΩ	—
Output current*2	I_{OUT}	$V_{IN} \geq V_{OUT(S)} + 1.0$ V	300*5	—	—	mA	8
Dropout voltage*3	V_{drop}	$I_{OUT} = 100$ mA, $V_{VADJ} = V_{OUT}$, $V_{OUT(S)} = 1.8$ V	—	0.24	0.28	V	6
Line regulation	$\frac{\Delta V_{OUT1}}{\Delta V_{IN} \cdot V_{OUT}}$	$V_{VADJ} = V_{OUT}$, $V_{OUT(S)} + 0.5$ V $\leq V_{IN} \leq 10$ V, $I_{OUT} = 100$ mA	—	0.02	0.2	%/V	6
Load regulation	ΔV_{OUT2}	$V_{VADJ} = V_{OUT}$, $V_{IN} = V_{OUT(S)} + 1.0$ V, 1.0 mA $\leq I_{OUT} \leq$ 100 mA	—	15	40	mV	6
Output voltage temperature coefficient*4	$\frac{\Delta V_{OUT}}{\Delta Ta \cdot V_{OUT}}$	$V_{IN} = V_{OUT(S)} + 1.0$ V, $I_{OUT} = 30$ mA, −40 °C $\leq$ Ta $\leq$ 85 °C	—	±130	—	ppm/°C	6
Current consumption during operation	I_{SS1}	$V_{IN} = V_{OUT(S)} + 1.0$ V, $V_{OUT} = V_{VADJ}$, ON/OFF pin = ON, no load	—	60	90	μA	7
Current consumption during shutdown	I_{SS2}	$V_{IN} = V_{OUT(S)} + 1.0$ V, $V_{OUT} = V_{VADJ}$, ON/OFF pin = OFF, no load	—	0.1	1.0	μA	7
Input voltage	V_{IN}	—	2.0	—	10	V	—
Shutdown pin input voltage "H"	V_{SH}	$V_{IN} = V_{OUT(S)} + 1.0$ V, $R_L = 1.0$ kΩ	1.5	—	—	V	9
Shutdown pin input voltage "L"	V_{SL}	$V_{IN} = V_{OUT(S)} + 1.0$ V, $R_L = 1.0$ kΩ	—	—	0.25	V	9
Shutdown pin input current "H"	I_{SH}	$V_{IN} = V_{OUT(S)} + 1.0$ V, $V_{ON/OFF} = 7$ V	−0.1	—	0.1	μA	9
Shutdown pin input current "L"	I_{SL}	$V_{IN} = V_{OUT(S)} + 1.0$ V, $V_{ON/OFF} = 0$ V	−0.1	—	0.1	μA	9
Ripple rejection	$\lvert RR \rvert$	$V_{VADJ} = V_{OUT}$, $V_{IN} = V_{OUT(S)} + 1.0$ V, f = 1.0 kHz, $\Delta V_{rip} = 0.5$ Vrms, $I_{OUT} = 50$ mA, $V_{OUT(S)} = 1.8$ V	—	65	—	dB	10
Short-circuit current	I_{short}	$V_{IN} = V_{OUT(S)} + 1.0$ V, ON/OFF pin = ON, $V_{OUT} = 0$ V	—	200	—	mA	8
Thermal shutdown detection temperature	T_{SD}	Junction temperature	—	150	—	°C	—
Thermal shutdown release temperature	T_{SR}	Junction temperature	—	120	—	°C	—

***1.** $V_{OUT(S)}$: Extarnal setting reference voltage (= 1.8 V)

***2.** The output current at which the output voltage becomes 95% of V_{VADJ} after gradually increasing the output current.

***3.** $V_{drop} = V_{IN1} - (V_{OUT3} \times 0.98)$

V_{OUT3} is the output voltage when $V_{IN} = V_{OUT(S)} + 1.0$ V and $I_{OUT} = 100$ mA.

V_{IN1} is the input voltage at which the output voltage becomes 98% of V_{OUT3} after gradually decreasing the input voltage.

***4.** The change in temperature [mV/°C] is calculated using the following equation.

$$\frac{\Delta V_{OUT}}{\Delta Ta}\left[\mathrm{mV/°C}\right]^{*1} = V_{OUT(S)}\left[\mathrm{V}\right]^{*2} \times \frac{\Delta V_{OUT}}{\Delta Ta \;\; V_{OUT}}\left[\mathrm{ppm/°C}\right]^{*3} \div 1000$$

***1.** The change in temperature of the output voltage

***2.** Extarnal setting reference voltage

***3.** Output voltage temperature coefficient

***5.** The output current can be at least this value. Due to restrictions on the package power dissipation, this value may not be satisfied. Attention should be paid to the power dissipation of the package when the output current is large. This specification is guaranteed by design.

■ Test Circuits

1.

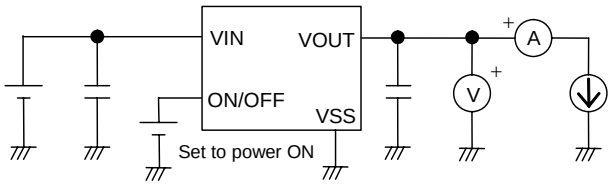

Figure 6

2.

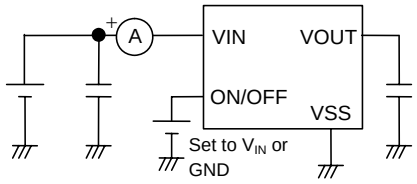

Figure 7

3.

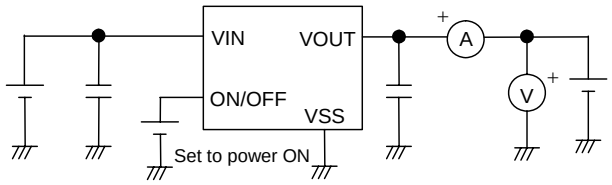

Figure 8

4.

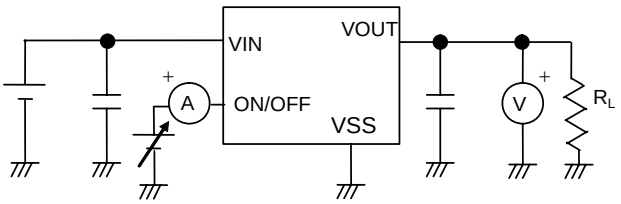

Figure 9

5.

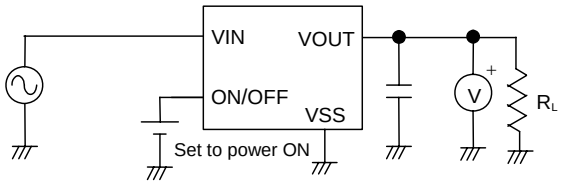

Figure 10

6.

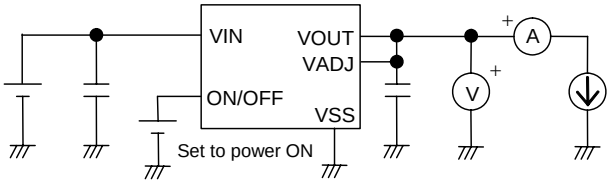

Figure 11

7.

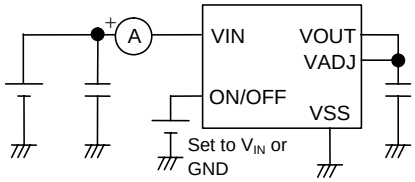

Figure 12

8.

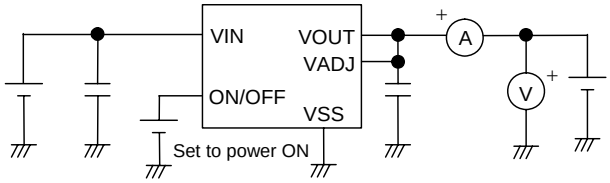

Figure 13

9.

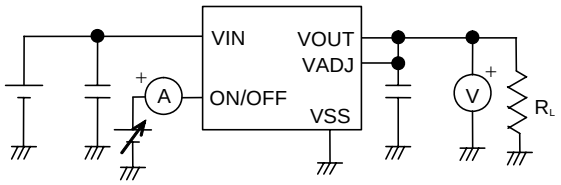

Figure 14

10.

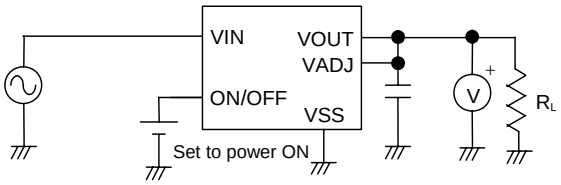

Figure 15

11.

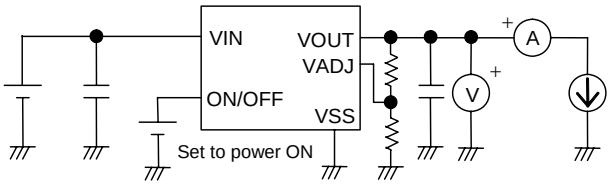

Figure 16

■ Standard Circuit

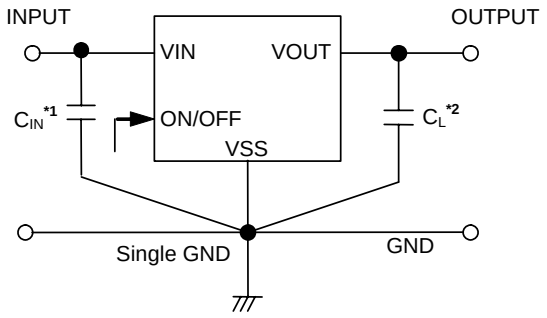

***1.** C_{IN} is a capacitor for stabilizing the input.
A ceramic capacitor of 2.2 μF or more can be used as the output capacitor for products whose output voltage is 1.7 V or less.

***2.** A ceramic capacitor of 1.0 μF or more can be used for C_L.
A ceramic capacitor of 2.2 μF or more can be used as the output capacitor for products whose output voltage is 1.7 V or less.

Figure 17

Caution The above connection diagram and constant will not guarantee successful operation. Perform thorough evaluation using the actual application to set the constant.

■ Application Conditions

Input capacitor (C_{IN}) :	1.0 μF or more*1
Output capacitor (C_L) :	1.0 μF or more*1
ESR of output capacitor :	1.0 Ω or less

***1.** 2.2 μF or more for products whose output voltage is 1.7 V or less

Caution A general series regulator may oscillate, depending on the external components selected. Check that no oscillation occurs with the application using the above capacitor.

■ Selection of Input and Output Capacitors (C_{IN}, C_L)

The S-1133 Series requires an output capacitor between the VOUT and VSS pins for phase compensation. Operation is stabilized by a ceramic capacitor with an output capacitance of 1.0 μF or more*1 in the entire temperature range. However, when using an OS capacitor, tantalum capacitor, or aluminum electrolytic capacitor, a capacitor with a capacitance of 1.0 μF or more and an Equivalent Series Resistance (ESR) of 1.0 Ω or less is required.
The value of the output overshoot or undershoot transient response varies depending on the value of the output capacitor. Perform thorough evaluation using the actual application, including temperature characteristics.

***1.** The capacitance is 2.2 μF or more for products whose output voltage is 1.7 V or less.

■ Explanation of Terms

1. Low dropout voltage regulator

The low dropout voltage regulator is a voltage regulator whose dropout voltage is low due to its built-in low on-resistance transistor.

2. Low ESR

A capacitor whose ESR (Equivalent Series Resistance) is low. The S-1133 Series enables use of a low ESR capacitor, such as a ceramic capacitor, for the output-side capacitor C_L. A capacitor whose ESR is 1.0 Ω or less can be used.

3. Output voltage (V_{OUT})

The accuracy of the output voltage is ensured at ±1.0% under the specified conditions of fixed input voltage[*1], fixed output current, and fixed temperature.

***1.** Differs depending on the product.

Caution **If the above conditions change, the output voltage value may vary and exceed the accuracy range of the output voltage. Please see the electrical characteristics and attached characteristics data for details.**

Remark In the types of the S-1133 Series in which the output voltage is 1.2 to 1.4 V, the output voltage accuracy is ±15 mV.

4. Line regulation $\left(\frac{\Delta V_{OUT1}}{\Delta V_{IN} \quad V_{OUT}}\right)$

Indicates the dependency of the output voltage on the input voltage. That is, the values show how much the output voltage changes due to a change in the input voltage with the output current remaining unchanged.

5. Load regulation (ΔV_{OUT2})

Indicates the dependency of the output voltage on the output current. That is, the values show how much the output voltage changes due to a change in the output current with the input voltage remaining unchanged.

6. Dropout voltage (V_{drop})

Indicates the difference between the input voltage V_{IN1}, which is the input voltage (V_{IN}) at the point where the output voltage has fallen to 98% of the output voltage value V_{OUT3} after V_{IN} was gradually decreased from $V_{IN} = V_{OUT(S)} + 1.0$ V, and the output voltage at that point ($V_{OUT3} \times 0.98$).

$V_{drop} = V_{IN1} - (V_{OUT3} \times 0.98)$

7. Temperature coefficient of output voltage $\left[\frac{\Delta V_{OUT}}{\Delta Ta \quad V_{OUT}}\right]$

The shadowed area in **Figure 18** is the range where V_{OUT} varies in the operating temperature range when the temperature coefficient of the output voltage is ±130 ppm/°C.

Ex. S-1133B30 Typ.

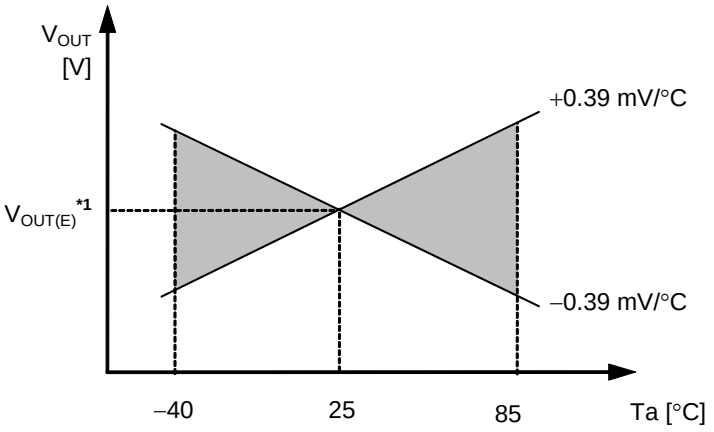

***1.** $V_{OUT(E)}$ is the value of the output voltage measured at 25°C.

Figure 18

A change in the temperature of the output voltage [mV/°C] is calculated using the following equation.

$$\frac{\Delta V_{OUT}}{\Delta Ta}[\text{mV/°C}]^{*1} = V_{OUT(S)}[\text{V}]^{*2} \times \frac{\Delta V_{OUT}}{\Delta Ta \quad V_{OUT}}[\text{ppm/°C}]^{*3} \div 1000$$

***1.** Change in temperature of output voltage
***2.** Specified output voltage
***3.** Output voltage temperature coefficient

■ Operation

1. Basic operation

Figure 19 shows the block diagram of the S-1133 Series.
The error amplifier compares the reference voltage (V_{ref}) with V_{fb}, which is the output voltage resistance-divided by feedback resistors R_s and R_f. It supplies the output transistor with the gate voltage necessary to ensure a certain output voltage free of any fluctuations of input voltage and temperature.

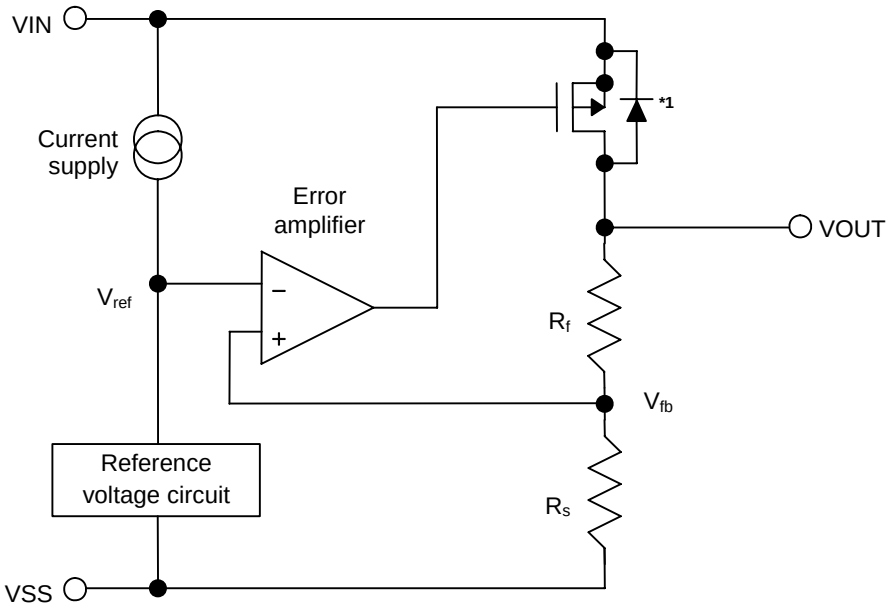

***1.** Parasitic diode

Figure 19

2. Output transistor

The S-1133 Series uses a low on-resistance P-channel MOS FET as the output transistor.
Be sure that V_{OUT} does not exceed V_{IN} + 0.3 V to prevent the voltage regulator from being damaged due to inverse current flowing from the VOUT pin through a parasitic diode to the VIN pin.

3. Shutdown pin (ON/OFF pin)

This pin starts and stops the regulator.

When the ON/OFF pin is set to the shutdown level, the operation of all internal circuits stops, and the built-in P-channel MOS FET output transistor between the VIN pin and VOUT pin is turned off to substantially reduce the current consumption. The VOUT pin becomes the V_{SS} level due to the internally divided resistance of several hundreds kΩ between the VOUT pin and VSS pin.
The structure of the ON/OFF pin is as shown in **Figure 20**. Since the ON/OFF pin is neither pulled down nor pulled up internally, do not use it in the floating state. In addition, note that the current consumption increases if a voltage of 0.3 V to V_{IN} − 0.3 V is applied to the ON/OFF pin. When the ON/OFF pin is not used, connect it to the VSS pin if the logic type is "A" and to the VIN pin if it is "B".

Table 7

Logic Type	ON/OFF Pin	Internal Circuits	VOUT Pin Voltage	Current Consumption
A	"L": Power on	Operating	Set value	I_{SS1}
A	"H": Power off	Stopped	V_{SS} level	I_{SS2}
B	"L": Power off	Stopped	V_{SS} level	I_{SS2}
B	"H": Power on	Operating	Set value	I_{SS1}

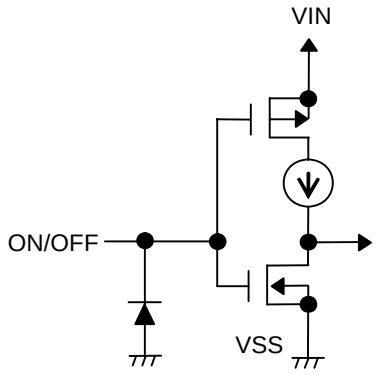

Figure 20

4. Thermal shutdown circuit

The S-1133 Series implements a thermal shutdown circuit to protect the device from damage due to overheating. When the junction temperature rises to 150 °C (typ.), the thermal shutdown circuit operates and the regulator operation stops. When the junction temperature drops to 120 °C (typ.), the thermal shutdown circuit is released and the regulator operation resumes.
If the thermal shutdown circuit starts operating due to self-heating, the regulator operation stops and the output voltage falls. When the regulator operation has stopped, no self-heat is generated and the temperature of the IC is lowered. When the temperature has dropped, the thermal shutdown circuit is released, the regulator operation resumes, and self-heat is generated again. By repeating this procedure, the output voltage waveform forms pulses. This phenomenon, stopping and resuming the regulator operation, continues until the internal power consumption is reduced by reducing either the input voltage or output current or both, or the ambient temperature is lowered.

Table 8

Thermal Shutdown Circuit	VOUT Pin Voltage
Operating : 150 °C (typ.)*1	V_{SS} level
Released : 120 °C (typ.)*1	Set value

***1.** Junction temperature

5. Externally setting output voltage

The S-1133 Series provides the types in which output voltage can be set via the external resistor (S-1133B00/S-1133A00). With such types, the external voltage can be optionally set between 1.8 V and 8.2 V by connecting a resistor (R_a) between the VOUT and VADJ pins and a resistor (R_b) between the VADJ and VSS pins.
The output voltage to be set is determined by the following formulas.

$V_{OUT} = 1.8 + R_a \times I_a$ ····· (1)
By substituting $I_a = I_{VADJ} + 1.8/R_b$ to above formula (1),
$V_{OUT} = 1.8 + R_a \times (I_{VADJ} + 1.8/R_b) = 1.8 \times (1.0 + R_a/R_b) + R_a \times I_{VADJ}$ ····· (2)

In above formula (2), $R_a \times I_{VADJ}$ is a factor for the output voltage error.
Whether the output voltage error is minute is judged depending on the following (3) formula.

By substituting $I_{VADJ} = 1.8/R_{VADJ}$ to $R_a \times I_{VADJ}$
$V_{OUT} = 1.8 \times (1.0 + R_a/R_b) + 1.8 \times R_a/R_{VADJ}$ ····· (3)

If R_{VADJ} is sufficiently larger than R_a, the error is judged as minute.

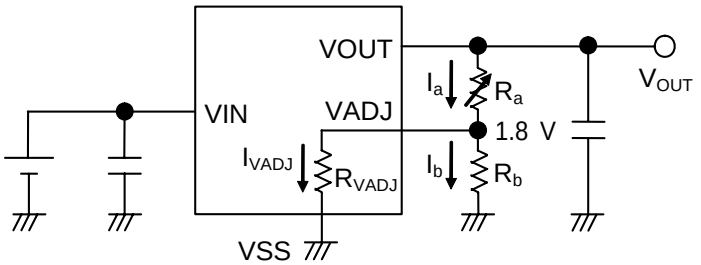

Figure 21

The following expression is in order to determine output voltage V_{OUT} = 3.0 V.
If resistance R_b = 2 KΩ, substitute internal resistance in adjust pin R_{VADJ} = 200 kΩ (typ.) into (3),
Resistance R_a = (3.0/1.8-1) × ((2 k × 200 k)/(2 k + 200 k)) ≒ 1.3 kΩ

Caution The above connection diagrams and constants will not guarantee successful operation. Perform thorough evaluation using the actual application to set the constants.

■ Precautions

- Wiring patterns for the VIN, VOUT and GND pins should be designed so that the impedance is low. When mounting an output capacitor between the VOUT and VSS pins (C_L) and a capacitor for stabilizing the input between VIN and VSS pins (C_{IN}), the distance from the capacitors to these pins should be as short as possible.
- When setting the output voltage using the external resistor, connect the resistors, R_a between the VOUT and VADJ pins and R_b between the VADJ and VSS pins close to the respective pins.
- In the product that users set the output voltage externally, it is possible to set a voltage arbitrarily; by feeding back the voltage which is from VOUT to the VADJ pin, after dividing it with the dividers connected between the VOUT and VADJ pin and the VADJ and VSS pin.
  Note that if any device other than the divider specified above is connected between the VOUT and VADJ pin or the VADJ and VSS pin, S-1133 Series may not work stably as a voltage regulator IC.
- Note that the output voltage may increase when a series regulator is used at low load current (1.0 mA or less).
- Note that the output voltage may increase due to driver leakage when a series regulator is used at high temperatures.
- A general series regulator may oscillate, depending on the external components selected. The following conditions are recommended for this IC. However, be sure to perform sufficient evaluation under the actual usage conditions for selection, including evaluation of temperature characteristics.

  Input capacitor (C_{IN}) : 1.0 μF or more*1
  Output capacitor (C_L) : 1.0 μF or more*1
  Equivalent series resistance (ESR) : 1.0 Ω or less

  ***1.** The capacitance is 2.2 μF or more for products whose output voltage is 1.7 V or less.

- The voltage regulator may oscillate when the impedance of the power supply is high and the input capacitor is small or an input capacitor is not connected.
- The power supply fluctuation and load fluctuation characteristics become worse. It is therefore important to sufficiently evaluate the output voltage fluctuation in the actual equipment.
- If the power supply suddenly increases sharply, a momentary overshoot may be output. It is therefore important to sufficiently evaluate the output voltage at power application in the actual equipment.
- When the thermal shutdown circuit starts operating and the regulator stops, input voltage may exceed the absolute maximum ratings.
  It will be affected largely when input voltage, output current and inductance of power supply are high.
  Perform thorough evaluation using the actual application.
- The application conditions for the input voltage, output voltage, and load current should not exceed the package power dissipation.
- Do not apply an electrostatic discharge to this IC that exceeds the performance ratings of the built-in electrostatic protection circuit.
- In determining the output current, attention should be paid to the output current value specified in **Tables 5** and **6** in “Electrical Characteristics” and footnote ***5** of the table.
- SII claims no responsibility for any disputes arising out of or in connection with any infringement by products including this IC of patents owned by a third party.

■ Characteristics (Typical Data)

(1) Output voltage vs. Output current (when load current increases) (Ta = 25 °C)

S-1133B12

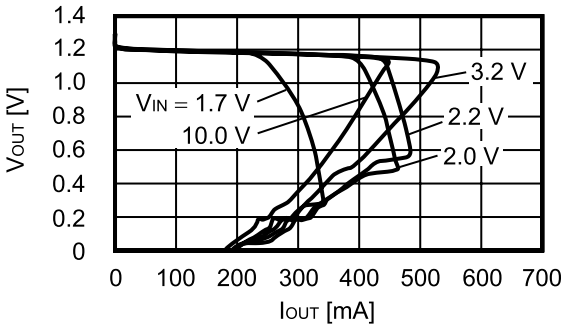

S-1133B30

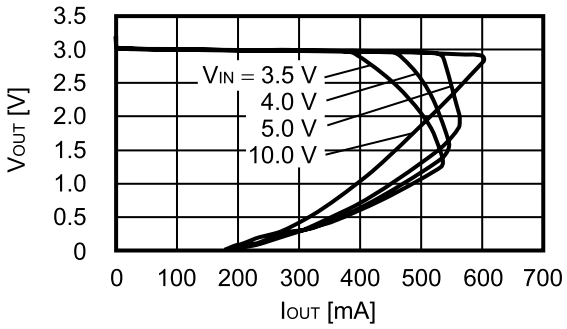

S-1133B60

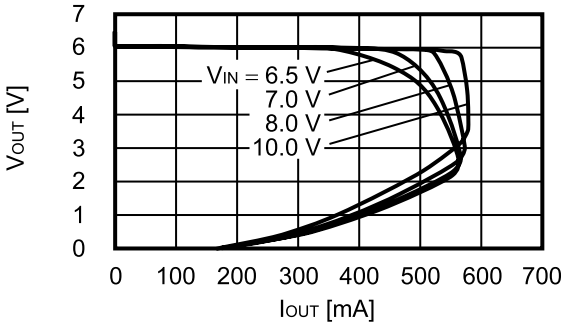

Remark In determining the output current, attention should be paid to the following.

1. The minimum output current value and footnote ***5** in **Table 5 to 6** in the "**Electrical Characteristics**"
2. The package power dissipation

(2) Output voltage vs. Input voltage (Ta = 25 °C)

S-1133B12

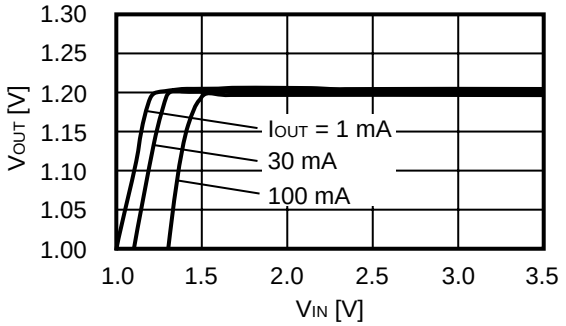

S-1133B30

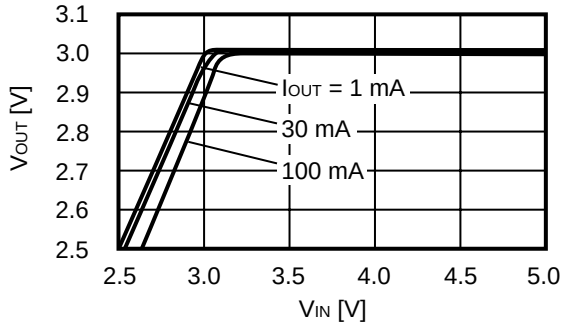

S-1133B60

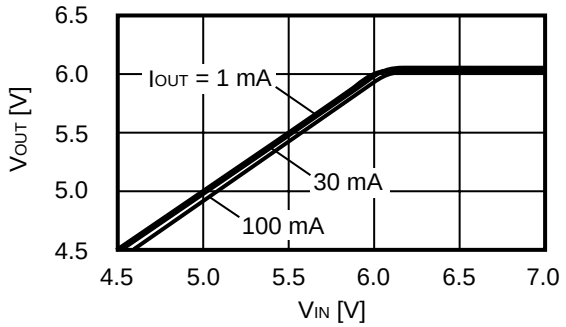

(3) Dropout voltage vs. Output current

S-1133B12

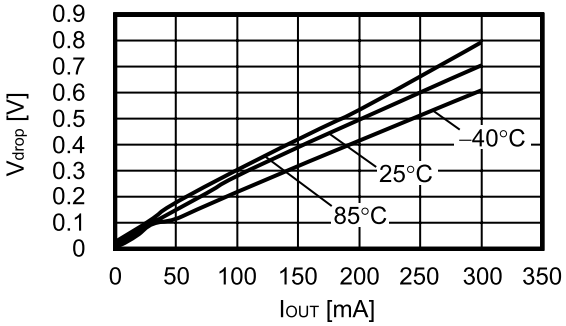

S-1133B30

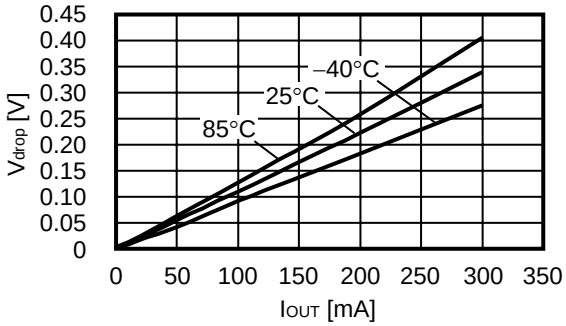

S-1133B60

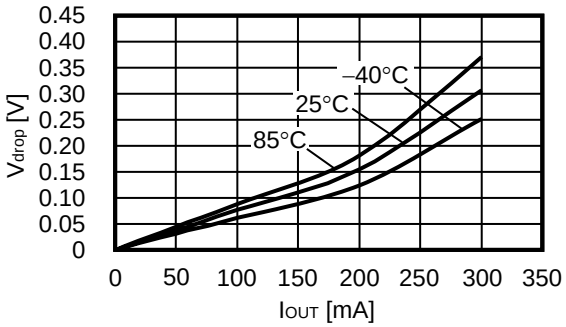

(4) Dropout voltage vs. Set output voltage

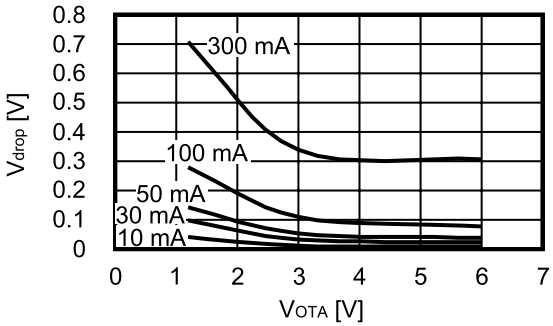

(5) Output voltage vs. Ambient temperature

S-1133B12

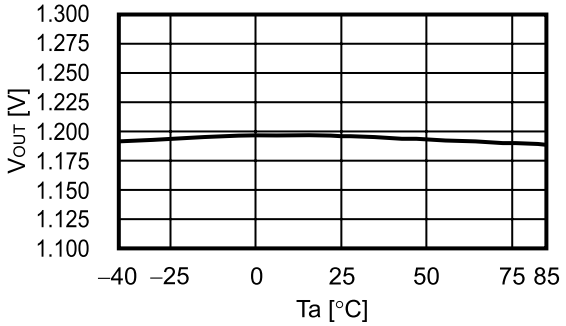

S-1133B30

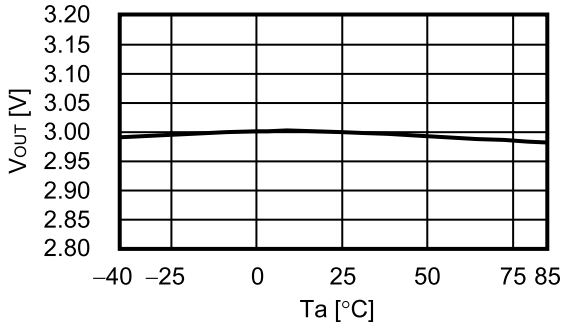

S-1133B60

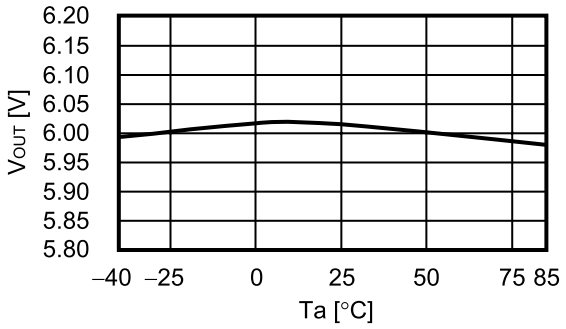

(6) Current consumption vs. Input voltage

S-1133B12

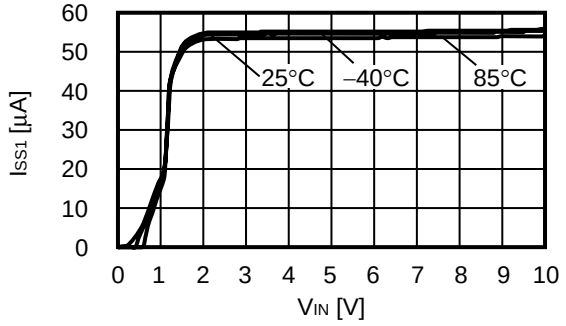

S-1133B30

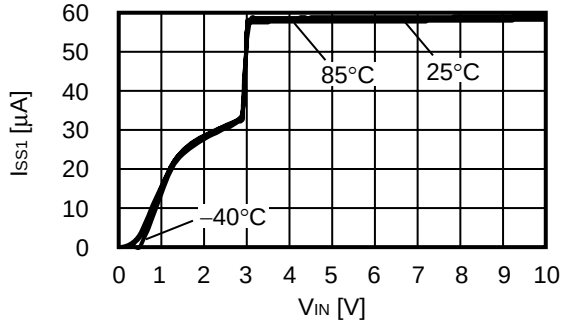

S-1133B60

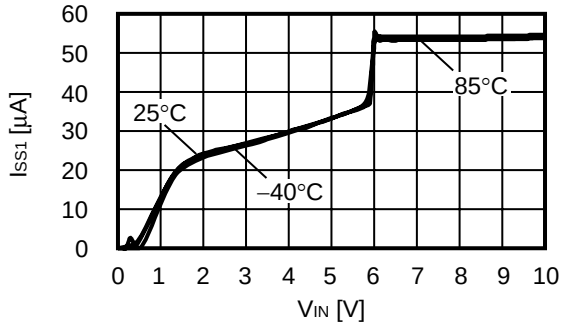

(7) Ripple rejection (Ta = 25 °C)

S-1133B12

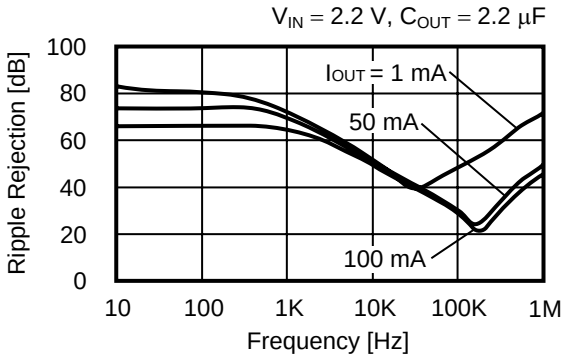

S-1133B30

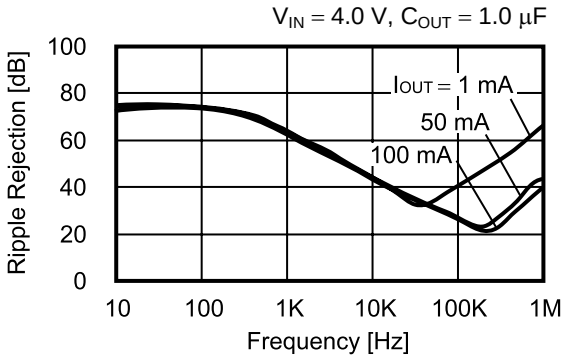

S-1133B60

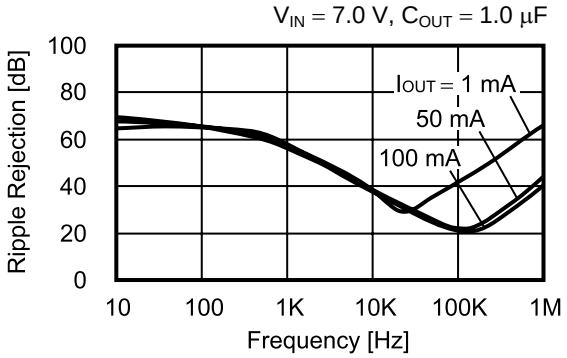

■ Reference Data

(1) Input transient response characteristics (Ta = 25 °C)

S-1133B12

I_{OUT} = 100 mA, tr = tf = 5.0 μs, C_{OUT} = 2.2 μF, C_{IN} = 2.2 μF

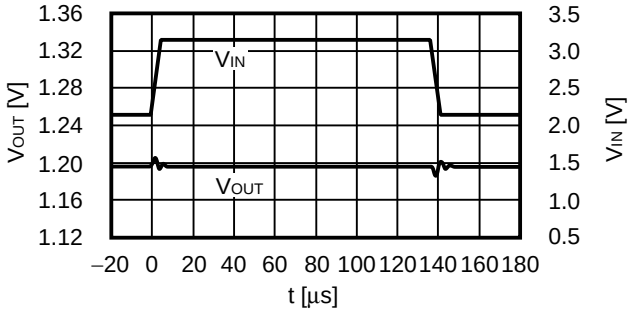

S-1133B30

I_{OUT} = 100 mA, tr = tf = 5.0 μs, C_{OUT} = 1.0 μF, C_{IN} = 1.0 μF

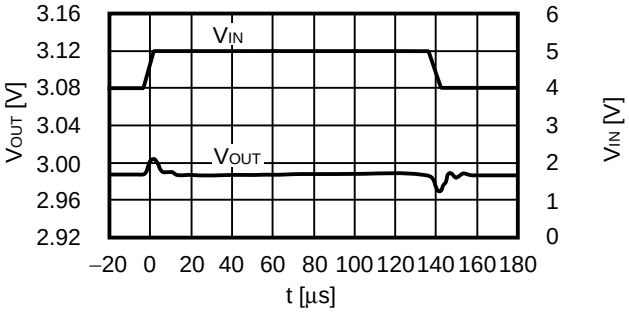

S-1133B60

I_{OUT} = 100 mA, tr = tf = 5.0 μs, C_{OUT} = 1.0 μF, C_{IN} = 1.0 μF

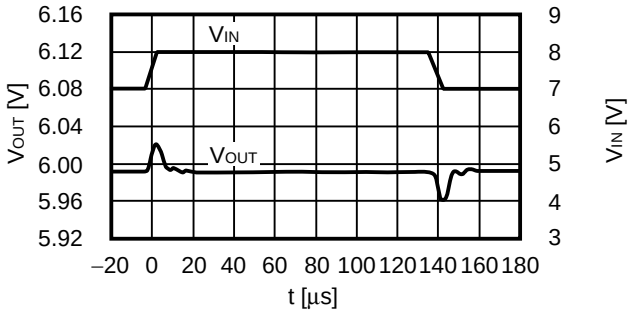

(2) Load transient response characteristics (Ta = 25 °C)

S-1133B12

V_{IN} = 2.2 V, C_{OUT} = 2.2 μF, C_{IN} = 2.2 μF, I_{OUT} = 50 ↔ 100 mA

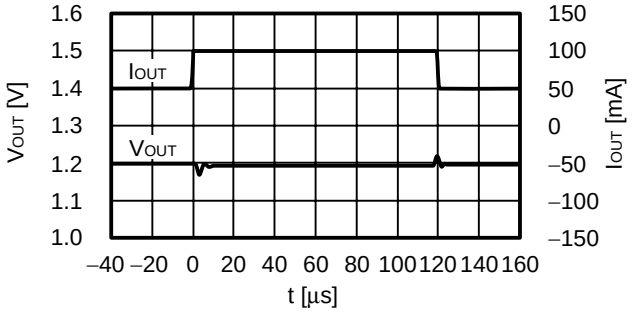

S-1133B30

V_{IN} = 4.0 V, C_{OUT} = 1.0 μF, C_{IN} = 1.0 μF, I_{OUT} = 50 ↔ 100 mA

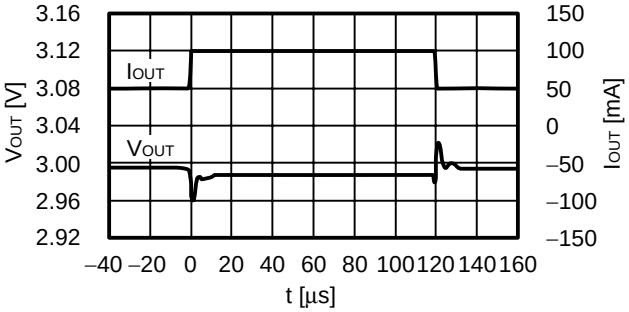

S-1133B60

V_{IN} = 7.0 V, C_{OUT} = 1.0 μF, C_{IN} = 1.0 μF, I_{OUT} = 50 ↔ 100 mA

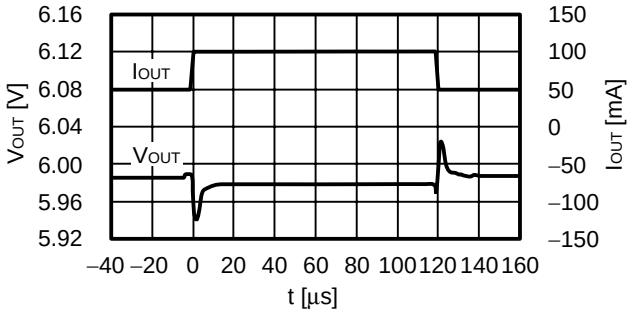

(3) ON/OFF pin transient response characteristics (Ta = 25 °C)

S-1133B12

V_{IN} = 2.2 V, C_{OUT} = 2.2 μF, C_{IN} = 2.2 μF, I_{OUT} = 100 mA

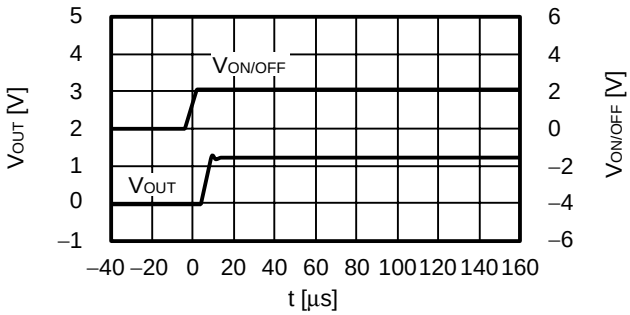

S-1133B30

V_{IN} = 4.0 V, C_{OUT} = 1.0 μF, C_{IN} = 1.0 μF, I_{OUT} = 100 mA

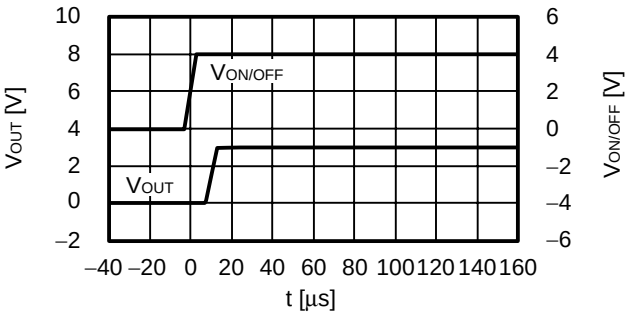

S-1133B60

V_{IN} = 7.0 V, C_{OUT} = 1.0 μF, C_{IN} = 1.0 μF, I_{OUT} = 100 mA

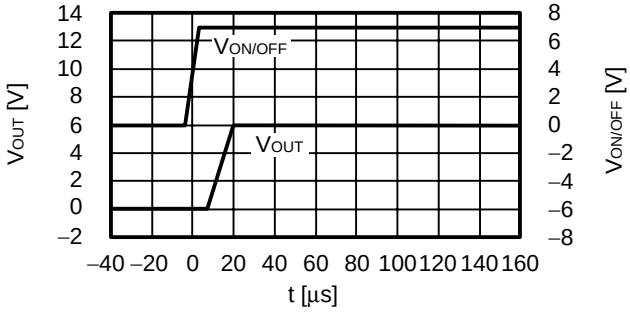

■ Marking Specifications

(1) SOT-89-5

SOT-89-5
Top view

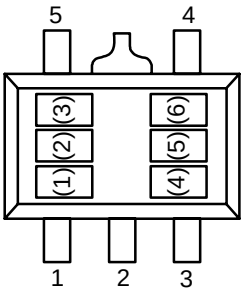

(1) to (3) : Product code (Refer to **Product name vs. Product code**.)
(4) to (6) : Lot number

Product name vs. Product code

Product name	Product code		
	(1)	(2)	(3)
S-1133B00-U5T1x	Q	8	A
S-1133B12-U5T1x	Q	8	B
S-1133B13-U5T1x	Q	8	C
S-1133B14-U5T1x	Q	8	D
S-1133B15-U5T1x	Q	8	E
S-1133B16-U5T1x	Q	8	F
S-1133B17-U5T1x	Q	8	G
S-1133B18-U5T1x	Q	8	H
S-1133B19-U5T1x	Q	8	I
S-1133B20-U5T1x	Q	8	J
S-1133B21-U5T1x	Q	8	K
S-1133B22-U5T1x	Q	8	L
S-1133B23-U5T1x	Q	8	M
S-1133B24-U5T1x	Q	8	N
S-1133B25-U5T1x	Q	8	O
S-1133B26-U5T1x	Q	8	P
S-1133B27-U5T1x	Q	8	Q
S-1133B28-U5T1x	Q	8	R
S-1133B29-U5T1x	Q	8	S
S-1133B30-U5T1x	Q	8	T
S-1133B31-U5T1x	Q	8	U
S-1133B32-U5T1x	Q	8	V
S-1133B33-U5T1x	Q	8	W
S-1133B34-U5T1x	Q	8	X
S-1133B35-U5T1x	Q	8	Y

Product name	Product code		
	(1)	(2)	(3)
S-1133B36-U5T1x	Q	8	Z
S-1133B37-U5T1x	Q	9	A
S-1133B38-U5T1x	Q	9	B
S-1133B39-U5T1x	Q	9	C
S-1133B40-U5T1x	Q	9	D
S-1133B41-U5T1x	Q	9	E
S-1133B42-U5T1x	Q	9	F
S-1133B43-U5T1x	Q	9	G
S-1133B44-U5T1x	Q	9	H
S-1133B45-U5T1x	Q	9	I
S-1133B46-U5T1x	Q	9	J
S-1133B47-U5T1x	Q	9	K
S-1133B48-U5T1x	Q	9	L
S-1133B49-U5T1x	Q	9	M
S-1133B50-U5T1x	Q	9	N
S-1133B51-U5T1x	Q	9	O
S-1133B52-U5T1x	Q	9	P
S-1133B53-U5T1x	Q	9	Q
S-1133B54-U5T1x	Q	9	R
S-1133B55-U5T1x	Q	9	S
S-1133B56-U5T1x	Q	9	T
S-1133B57-U5T1x	Q	9	U
S-1133B58-U5T1x	Q	9	V
S-1133B59-U5T1x	Q	9	W
S-1133B60-U5T1x	Q	9	X

Remark 1. Please contact the SII marketing department for type A products.
2. x: G or U
3. Please select products of environmental code = U for Sn 100%, halogen-free products.

(2) SNT-8A

SNT-8A
Top view

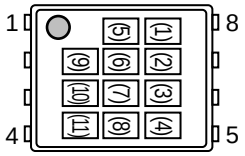

(1)	Blank
(2) to (4)	Product code (Refer to **Product name vs. Product code**)
(5), (6)	Blank
(7) to (11)	Lot number

Product name vs. Product code

Product name	Product code		
	(2)	(3)	(4)
S-1133B00-I8T1x	Q	8	A
S-1133B12-I8T1x	Q	8	B
S-1133B13-I8T1x	Q	8	C
S-1133B14-I8T1x	Q	8	D
S-1133B15-I8T1x	Q	8	E
S-1133B16-I8T1x	Q	8	F
S-1133B17-I8T1x	Q	8	G
S-1133B18-I8T1x	Q	8	H
S-1133B19-I8T1x	Q	8	I
S-1133B20-I8T1x	Q	8	J
S-1133B21-I8T1x	Q	8	K
S-1133B22-I8T1x	Q	8	L
S-1133B23-I8T1x	Q	8	M
S-1133B24-I8T1x	Q	8	N
S-1133B25-I8T1x	Q	8	O
S-1133B26-I8T1x	Q	8	P
S-1133B27-I8T1x	Q	8	Q
S-1133B28-I8T1x	Q	8	R
S-1133B29-I8T1x	Q	8	S
S-1133B30-I8T1x	Q	8	T
S-1133B31-I8T1x	Q	8	U
S-1133B32-I8T1x	Q	8	V
S-1133B33-I8T1x	Q	8	W
S-1133B34-I8T1x	Q	8	X
S-1133B35-I8T1x	Q	8	Y

Product name	Product code		
	(2)	(3)	(4)
S-1133B36-I8T1x	Q	8	Z
S-1133B37-I8T1x	Q	9	A
S-1133B38-I8T1x	Q	9	B
S-1133B39-I8T1x	Q	9	C
S-1133B40-I8T1x	Q	9	D
S-1133B41-I8T1x	Q	9	E
S-1133B42-I8T1x	Q	9	F
S-1133B43-I8T1x	Q	9	G
S-1133B44-I8T1x	Q	9	H
S-1133B45-I8T1x	Q	9	I
S-1133B46-I8T1x	Q	9	J
S-1133B47-I8T1x	Q	9	K
S-1133B48-I8T1x	Q	9	L
S-1133B49-I8T1x	Q	9	M
S-1133B50-I8T1x	Q	9	N
S-1133B51-I8T1x	Q	9	O
S-1133B52-I8T1x	Q	9	P
S-1133B53-I8T1x	Q	9	Q
S-1133B54-I8T1x	Q	9	R
S-1133B55-I8T1x	Q	9	S
S-1133B56-I8T1x	Q	9	T
S-1133B57-I8T1x	Q	9	U
S-1133B58-I8T1x	Q	9	V
S-1133B59-I8T1x	Q	9	W
S-1133B60-I8T1x	Q	9	X

Remark 1. Please contact the SII marketing department for type A products.
2. x: G or U
3. Please select products of environmental code = U for Sn 100%, halogen-free products.

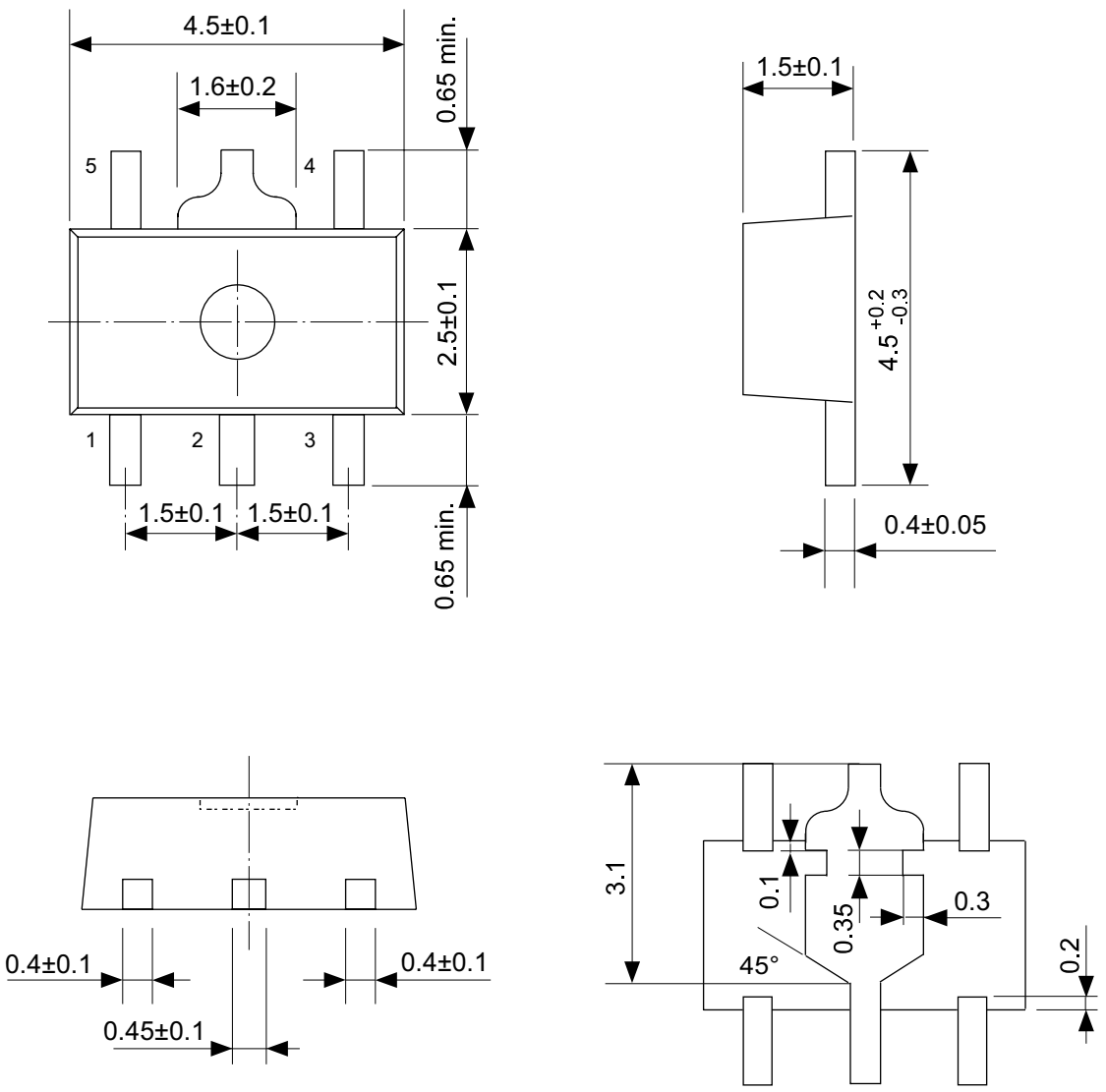

No. UP005-A-P-SD-1.1

TITLE	SOT895-A-PKG Dimensions
No.	UP005-A-P-SD-1.1
SCALE	
UNIT	mm
Seiko Instruments Inc.	

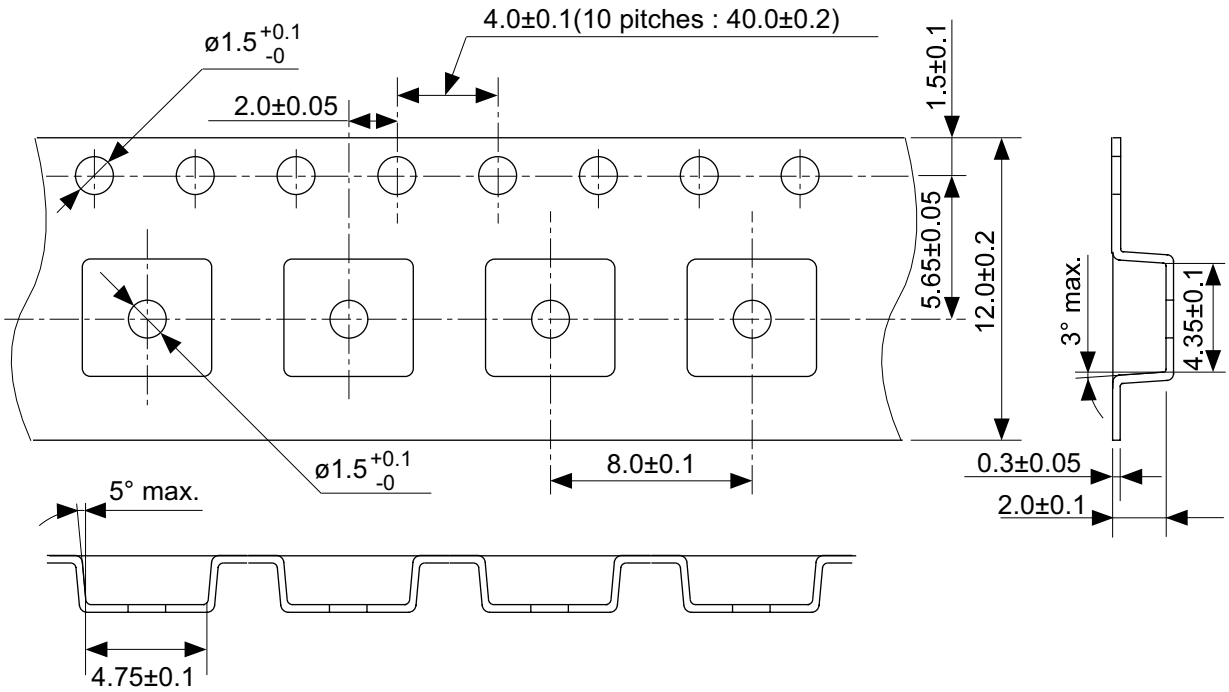

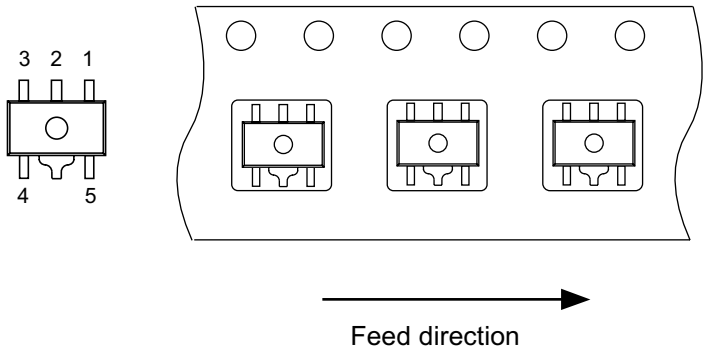

No. UP005-A-C-SD-1.1

TITLE	SOT895-A-Carrier Tape
No.	UP005-A-C-SD-1.1
SCALE	
UNIT	mm
Seiko Instruments Inc.	

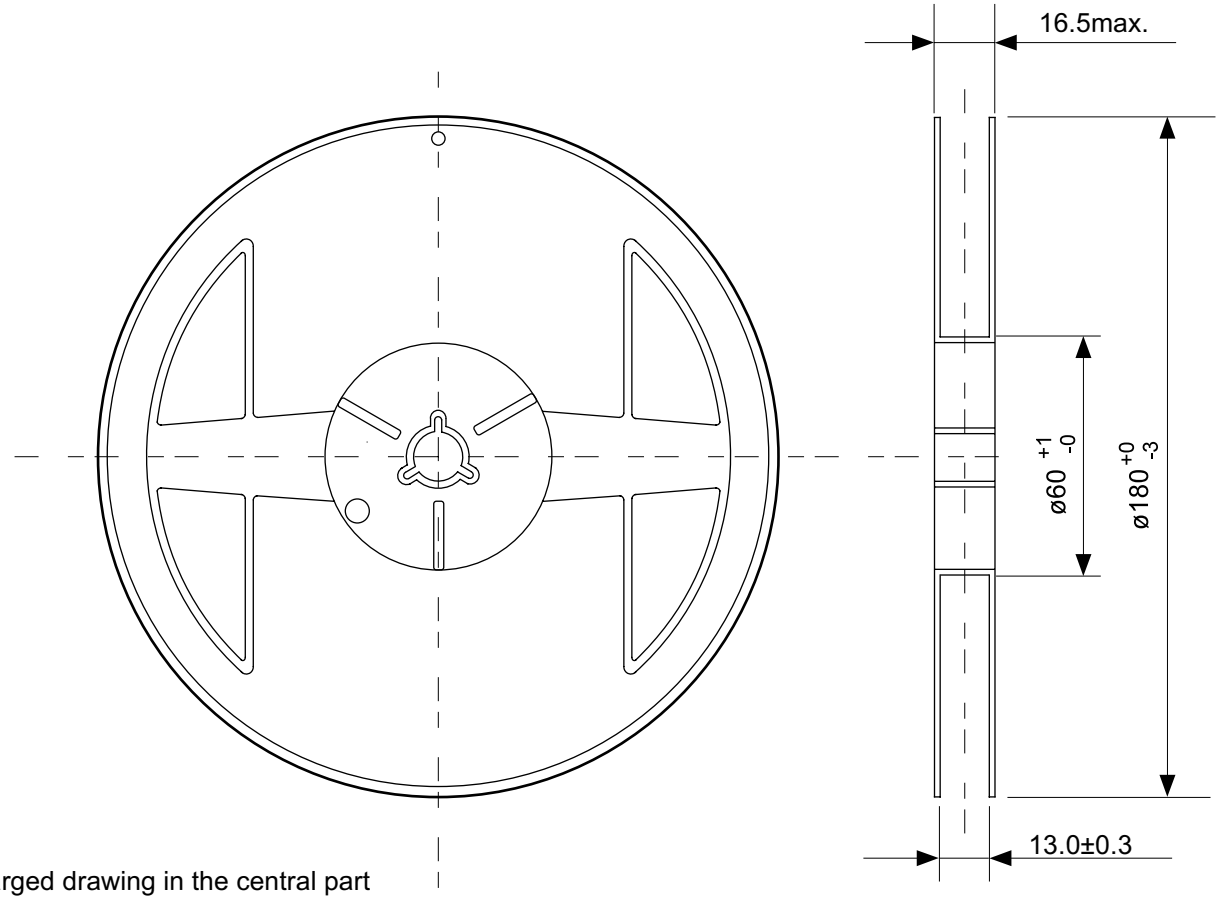

Enlarged drawing in the central part

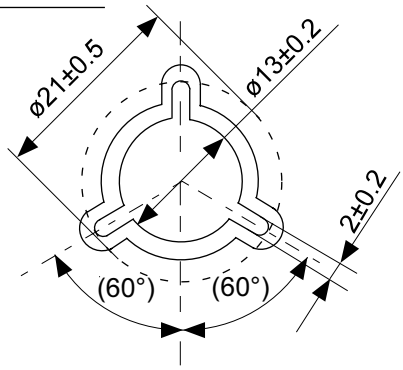

No. UP005-A-R-SD-1.1

TITLE	SOT895-A-Reel		
No.	UP005-A-R-SD-1.1		
SCALE		QTY.	1,000
UNIT	mm		
Seiko Instruments Inc.			

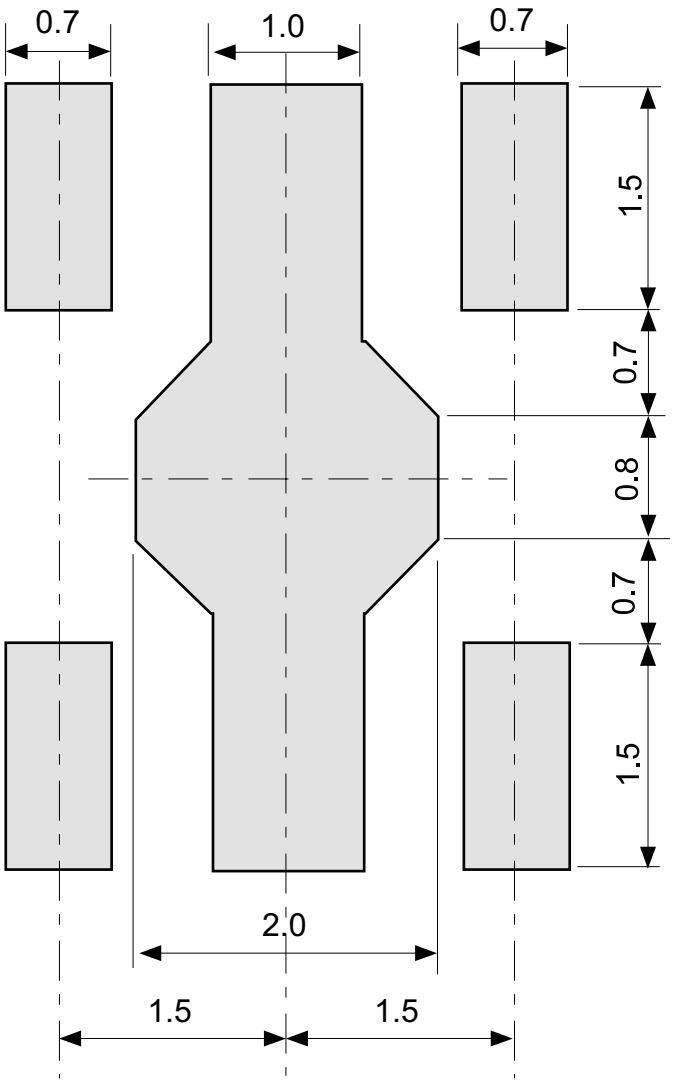

No. UP005-A-L-S1-1.0

TITLE	SOT895-A-Land Recommendation
No.	UP005-A-L-S1-1.0
SCALE	
UNIT	mm
Seiko Instruments Inc.	

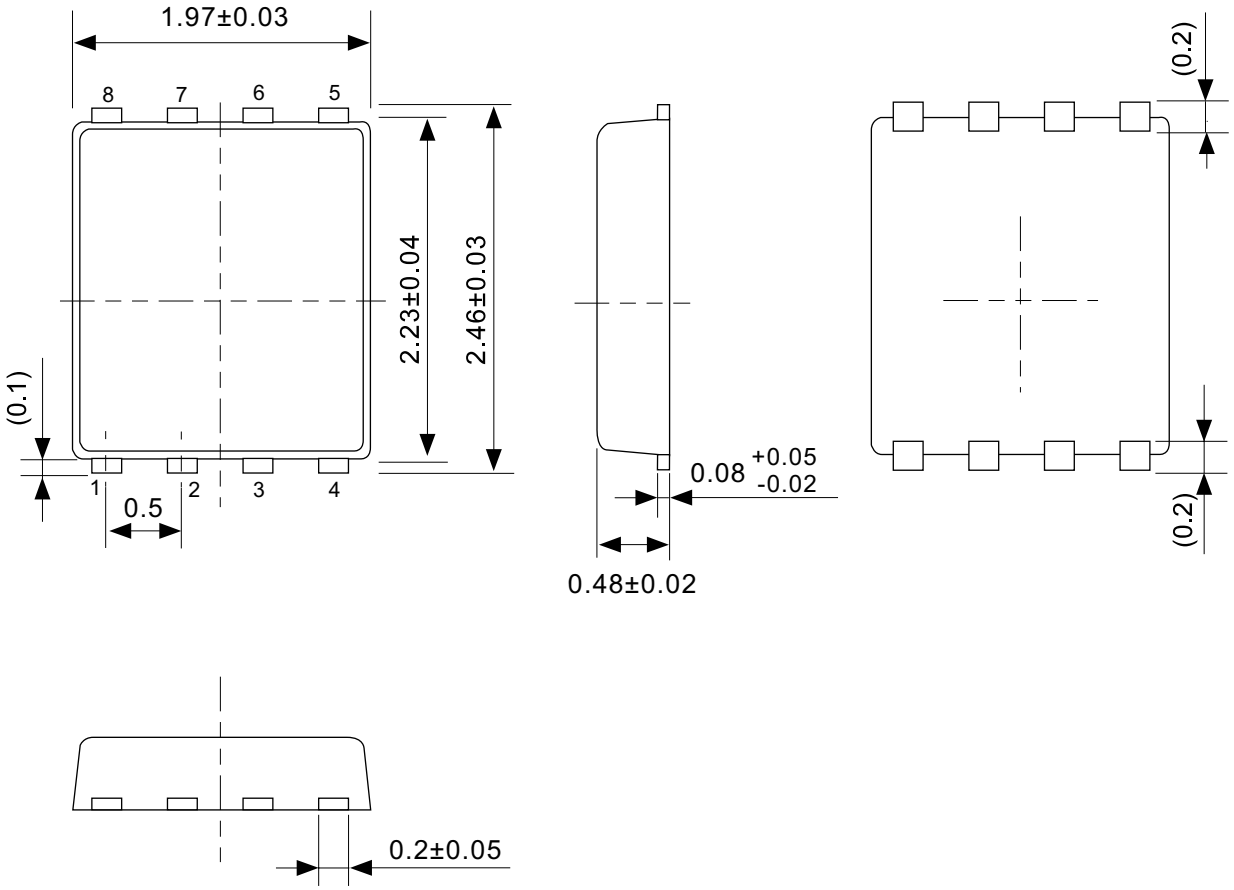

No. PH008-A-P-SD-2.0

TITLE	SNT-8A-A-PKG Dimensions
No.	PH008-A-P-SD-2.0
SCALE	
UNIT	mm
Seiko Instruments Inc.	

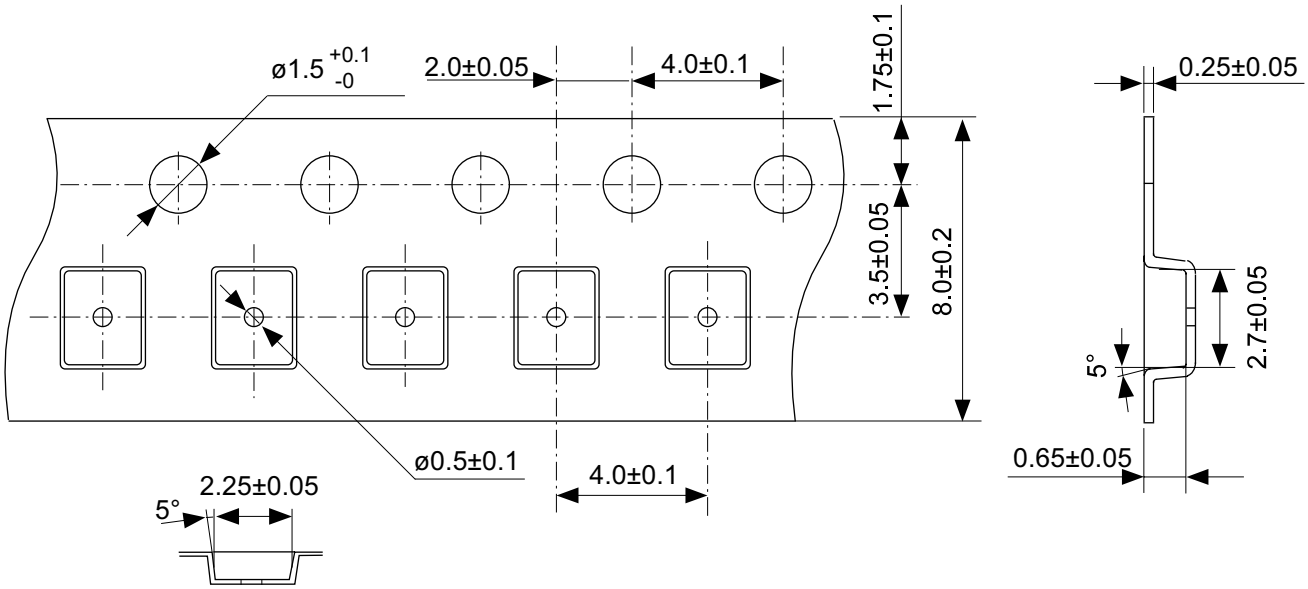

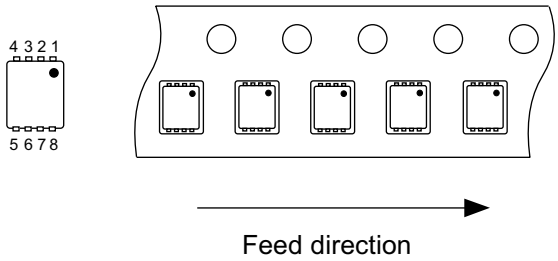

No. PH008-A-C-SD-1.0

TITLE	SNT-8A-A-Carrier Tape
No.	PH008-A-C-SD-1.0
SCALE	
UNIT	mm
Seiko Instruments Inc.	

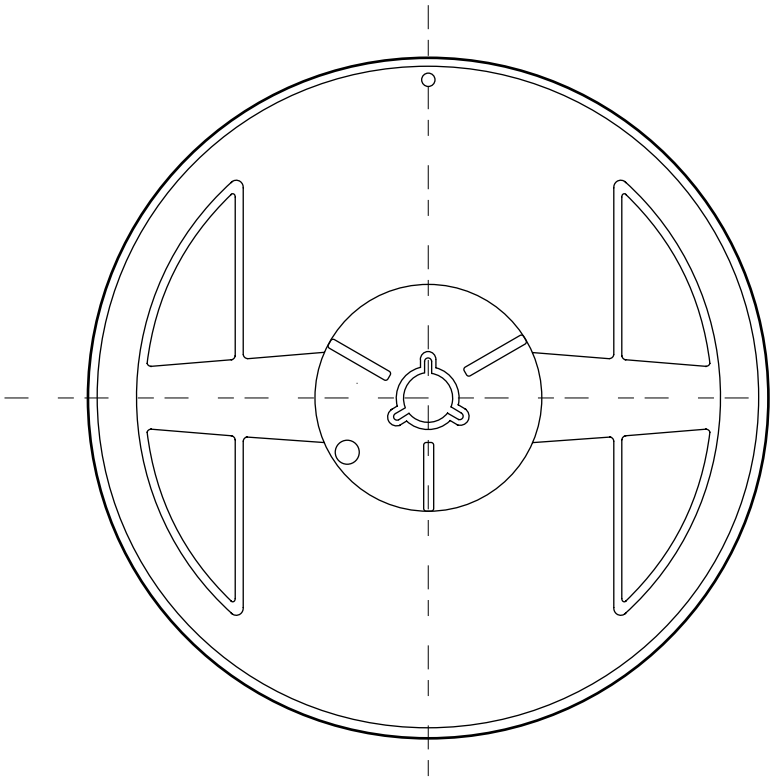

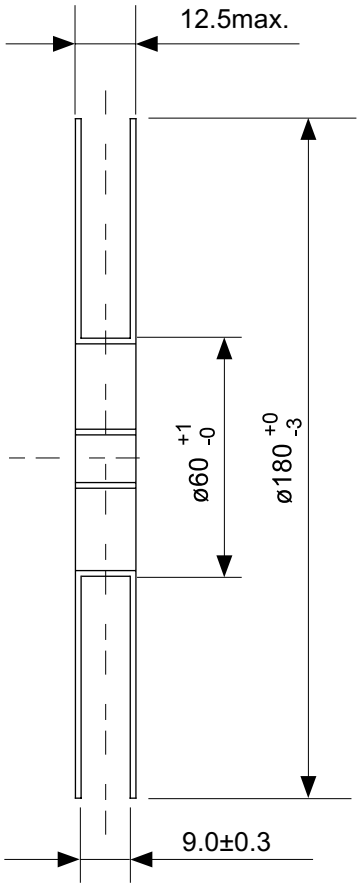

Enlarged drawing in the central part

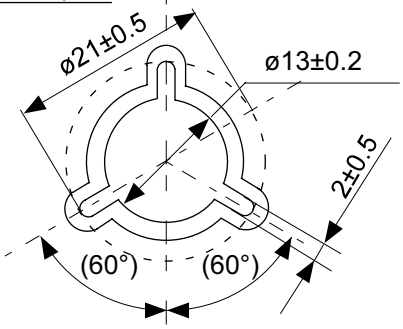

No. PH008-A-R-SD-1.0

TITLE	SNT-8A-A-Reel		
No.	PH008-A-R-SD-1.0		
SCALE		QTY.	5,000
UNIT	mm		
Seiko Instruments Inc.			

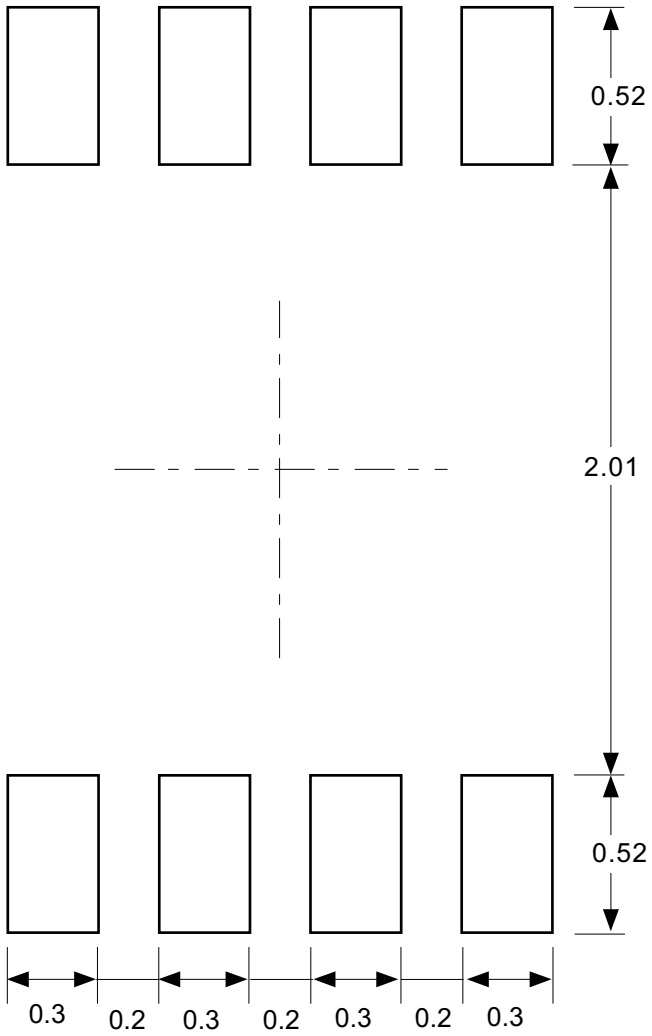

Caution Making the wire pattern under the package is possible. However, note that the package may be upraised due to the thickness made by the silk screen printing and of a solder resist on the pattern because this package does not have the standoff.

注意 パッケージ下への配線パターン形成は可能ですが、本パッケージはスタンドオフが無いので、パターン上のレジスト厚み、シルク印刷の厚みによってパッケージが持ち上がることがありますのでご配慮ください。

No. PH008-A-L-SD-3.0

TITLE	SNT-8A-A-Land Recommendation
No.	PH008-A-L-SD-3.0
SCALE	
UNIT	mm

Seiko Instruments Inc.

Seiko Instruments Inc.
www.sii-ic.com

- The information described herein is subject to change without notice.
- Seiko Instruments Inc. is not responsible for any problems caused by circuits or diagrams described herein whose related industrial properties, patents, or other rights belong to third parties. The application circuit examples explain typical applications of the products, and do not guarantee the success of any specific mass-production design.
- When the products described herein are regulated products subject to the Wassenaar Arrangement or other agreements, they may not be exported without authorization from the appropriate governmental authority.
- Use of the information described herein for other purposes and/or reproduction or copying without the express permission of Seiko Instruments Inc. is strictly prohibited.
- The products described herein cannot be used as part of any device or equipment affecting the human body, such as exercise equipment, medical equipment, security systems, gas equipment, or any apparatus installed in airplanes and other vehicles, without prior written permission of Seiko Instruments Inc.
- Although Seiko Instruments Inc. exerts the greatest possible effort to ensure high quality and reliability, the failure or malfunction of semiconductor products may occur. The user of these products should therefore give thorough consideration to safety design, including redundancy, fire-prevention measures, and malfunction prevention, to prevent any accidents, fires, or community damage that may ensue.